ELECTRIC SCISSOR LIFTS

OPTIMUM 6
OPTIMUM 8

Optimum compactness

- Width of 76 cm to operate in the most congested areas
- Compact stowed height for easy access through standard doorways

Exceptional productivity

- Driveable at full height
- Load capacity up to 270 kg (Opt.6)
- Extended platform
- Long working cycles

Robust, reliable, easy to maintain

Haulotte GROUP
More than lifting

www.haulotte.com

OPTIMUM 6 / OPTIMUM 8

ELECTRIC SCISSOR LIFTS

Haulotte GROUP

TECHNICAL DATA

	Optimum 6	Optimum 8
Working height	6.35 m	7.8 m
Platform height	4.35 m	5.8 m
Driveable at full height up to	4.35 m	5.8 m
Lift capacity - inside	270 kg	230 kg
Lift capacity - outside	270 kg	N/A
A Platform length - outside	1.68 m	1.68 m
B Platform length - extended	2.59 m	2.59 m
Length - extension	0.91 m	0.91 m
C Platform width - outside	0.7 m	0.7 m
D Storage height	1.91 m	2 m
E Height - stowed	1.91 m	2 m
F Overall width	0.76 m	0.76 m
G Length	1.9 m	1.9 m
H Wheelbase	1.38 m	1.38 m
I Ground clearance - Centre	8 cm	8 cm
Ground clearance - Pothole guards deployed	1.5 cm	1.5 cm
Drive speed	0.5 - 4.5 km/h	0.5 - 4.5 km/h
Gradeability	25 %	25 %
Tilt	2 °	2 °
Lift / lower speed	20 s/ 35 s	22 s / 37 s
Turning radius - outside	1.7 m	1.7 m
Tyres - non marking	12.5 x 4.25	12.5 x 4.25
Batteries	24 V - 180 Amph (C5)	24 V - 180 Amph (C5)
Hydraulic system capacity	20 l	20 l
Weight	1290 kg	1370 kg

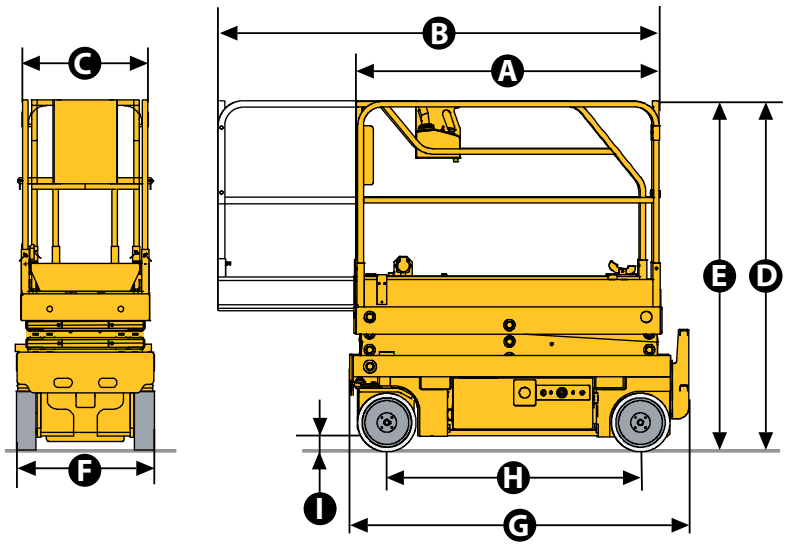

Optimum 8

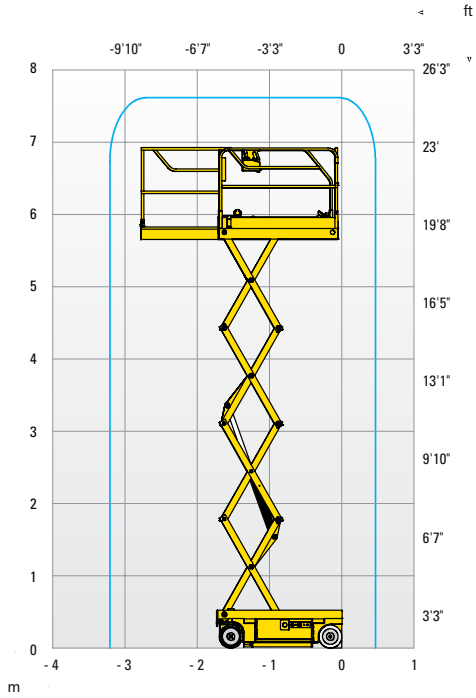

STANDARD EQUIPMENT

- Pothole guards
- Battery charge indicator
- Proportional lift and drive
- Inside / outside use (Optimum 6)
- Swing out component tray
- Battery charger with automatic stop
- Solid non-marking tyres
- Free wheeling device
- Tilt controller
- Load Management System in the platform
- Manual platform lowering valve
- Integrated forklift pockets
- Towing hooks
- Horn
- Hourmeter

OPTIONS AND ACCESSORIES

- Flashing light
- Travel alarm
- Working light
- Power to platform
- Biodegradable hydraulic oil
- Folding guardrails

2420603040- We reserve the right to modify the technical characteristics of this document without notice - 02/2013

Haulotte Group - La Péronnière - BP 9 - 42152 l'Horme - France • Tel: +33 (0)4 77 29 24 24 - Fax: +33 (0)4 77 29 43 95 - haulotte@haulotte.com - www.haulotte.com

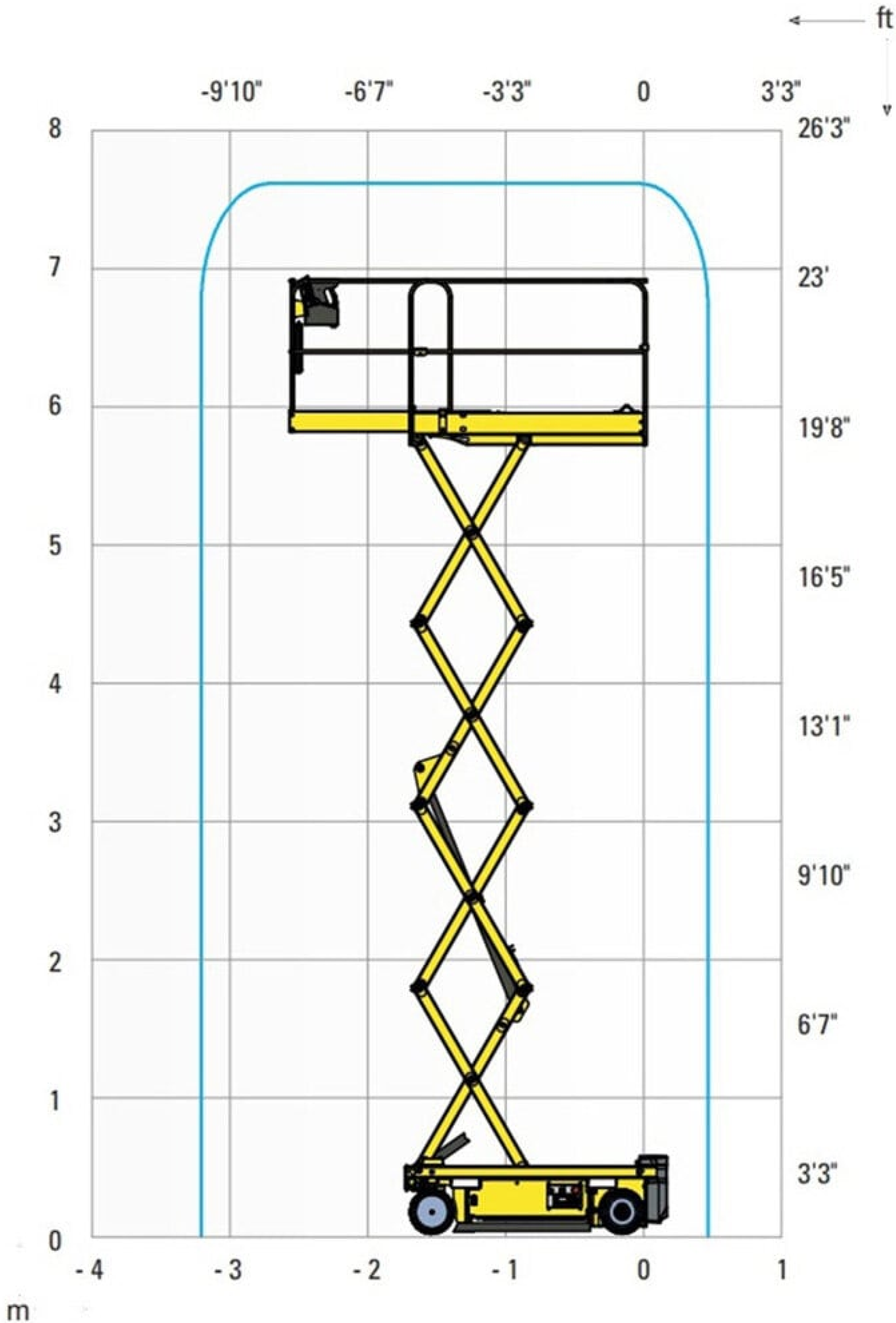
ft
-9'10"
-6'7"
-3'3"
0
3'3"
8
7
6
5
4
3
2
1
0
26'3"
23'
19'8"
16'5"
13'1"
9'10"
6'7"
3'3"
- 4
- 3
- 2
- 1
0
1
m

A - 1.73m

B - 0.76m

C - 2 m

D - 1.38m

E - 8cm

F x G - 1.65m x 0.7m

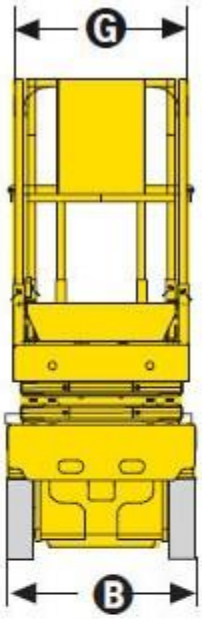

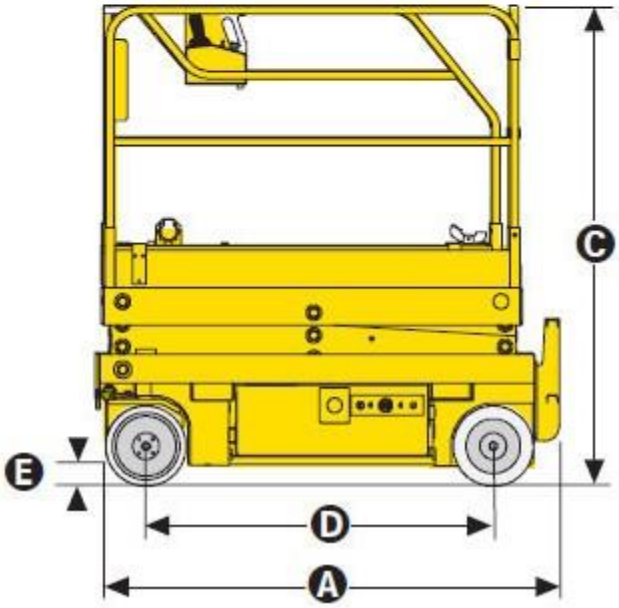

Specificatii tehnice:
– Inaltimea maxima de lucru: **7,80 m**;
– Inaltimea la baza platformei: 5,80 m;
– Dimensiuni nacela: 1,68 x 0,70 m;
– Sarcina utila in nacela: **230 kg**
– Extensie: 0,91 m
– Sarcina utila pe extensie: 230 kg;
– Alimentare: **baterie 24V** (4x 6V, 180 Ah);
– Incarcator baterie pentru 220 V;
– Timpul de urcare/ coborare: 22/ 37 s;
– Viteza de deplasare rapid/ de siguranta: 4,5/ 0,5 km/ h;
– Raza de bracaj interior/ exterior: zero/ 1,7 m
– Deplasarea in panta: 25%;
– Capacitate rezervor ulei hidraulic: 20 litri;
– Ampatament: 1,38 m;
– Garda la sol: 8 cm;
– Dimensiunea anvelopei 12,5 x 4,25 cm.
Dimensiuni de transport:
– Greutatea totala: 1.370 Kg;
– Lungime: 1,90 m;
– Latime: 0,76 m;
– Inaltime: 2,00 m.
Echipament standard:
– platformele sunt produse in concordanta cu normele EN 280 si regulile internationale de siguranta;
– transmisie electro-hidraulica;
– tractiune 4x2;
– comenzi proportionale;
– virare 90° ;
– predispozitie linie electrica de 220 V in nacela;
– claxon, girofar;
– contor orar;
– control electric al inclinarii cu oprire automata;
– sistem de diagnoza on-board;
– buton oprire de urgenta in nacela si la baza;
– alarma de avertizare la coborare;
– dispozitiv de limitare a incarcarii pe platforma;
– valva manuala pentru coborarea de urgenta;